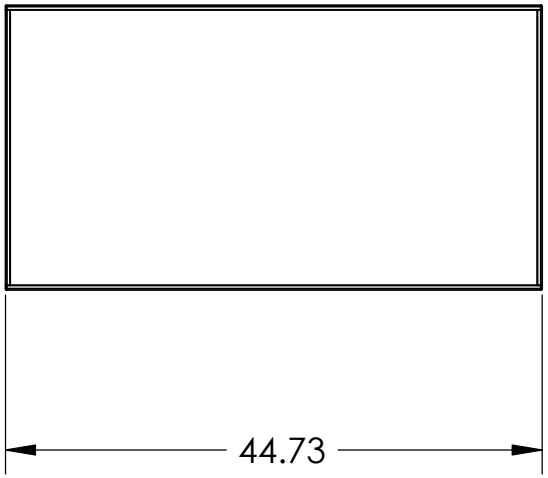

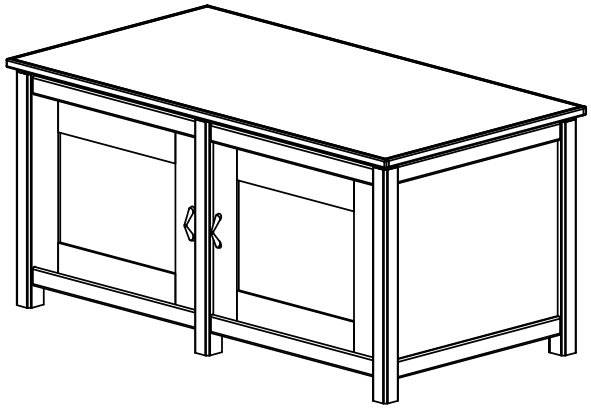

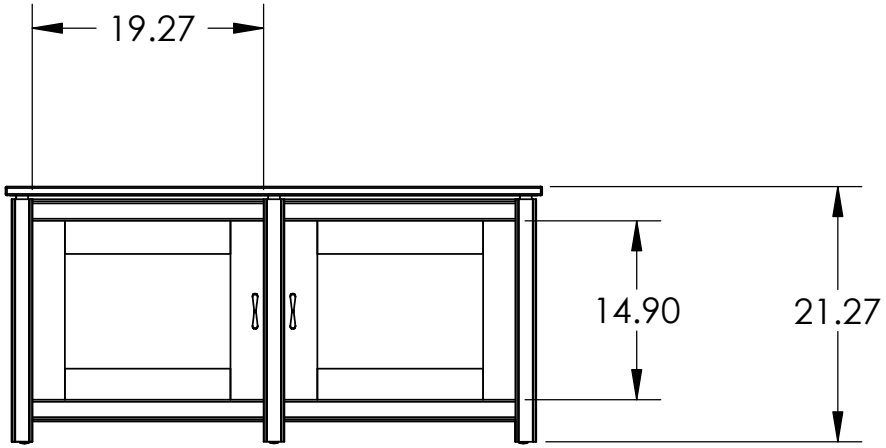

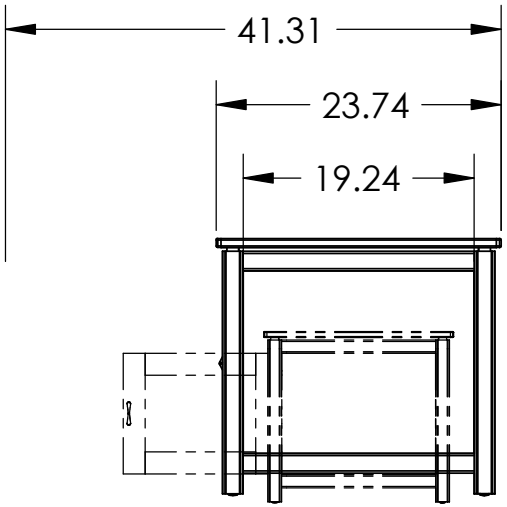

Maximum Weight Capacity:
Top Shelf 350 lbs.
Middle Shelves 60 lbs.
Bottom Shelf 100 lbs.

	NAME	DATE
DRAWN	NAS	11/14/05
CHECKED		
ENG APPR.		
MFG APPR.		
Q.A.		

SANUS SYSTEMS

TITLE:

WFV44

PROPRIETARY AND CONFIDENTIAL

THE INFORMATION CONTAINED IN THIS DRAWING IS THE SOLE PROPERTY OF SANUS SYSTEMS. ANY REPRODUCTION IN PART OR AS A WHOLE WITHOUT THE WRITTEN PERMISSION OF SANUS SYSTEMS IS PROHIBITED.

Woodbrook Furniture

SCALE: 1:16

SHEET 1 OF 1

5 4 3 2 1